Watertight Frames & Cover
Includes Inner Gasket, Inner Cover, Bolt & Lock Bar

Saddle Locking Device Optional

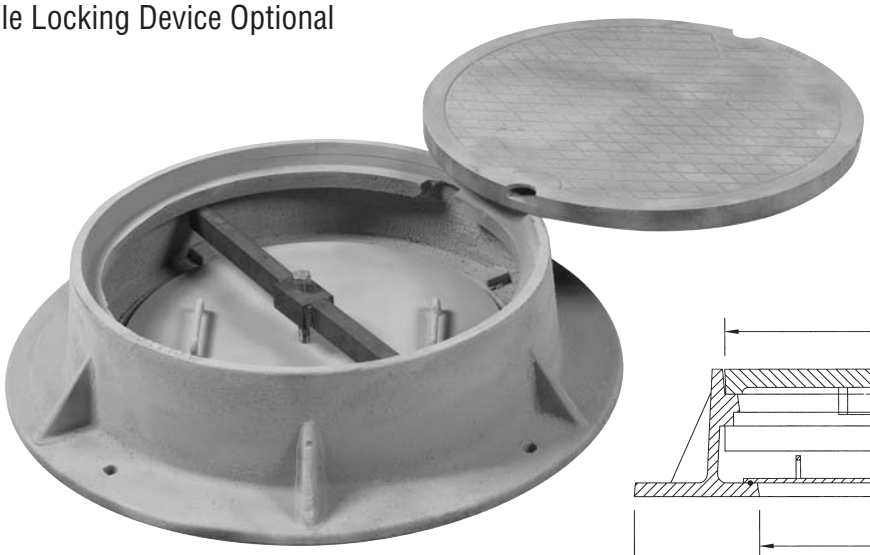

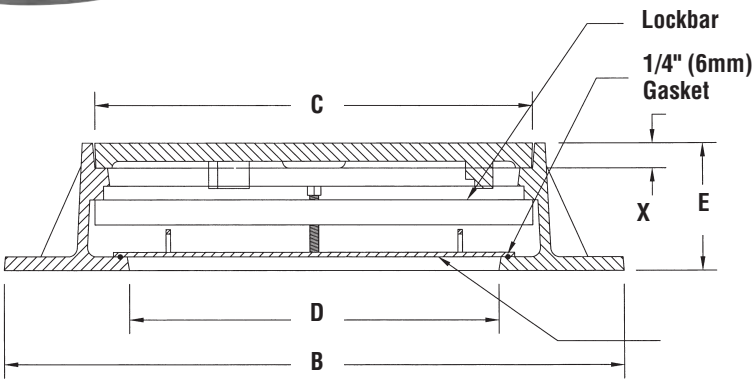

Project Notes

Pattern Number	B	C	D	E	X
6530	34	24	**20**	7	$1\frac{3}{8}$
6540	38	$25\frac{3}{4}$	**21**	8	$1\frac{3}{8}$
6544	39	30	**24**	7	$1\frac{1}{2}$
6553*	43	32	**27**	7	$1\frac{1}{2}$

*Available in square flange